# USB to UART Chip CH9340

Datasheet
Version: 1
http://wch.cn

## 1. Introduction

CH9340 is a USB bus converter chip, which converts USB to serial UART.

In serial UART mode, CH9340 provides common MODEM signals, which are used to expand UART interface for computer, or directly upgrade common serial device to USB bus.

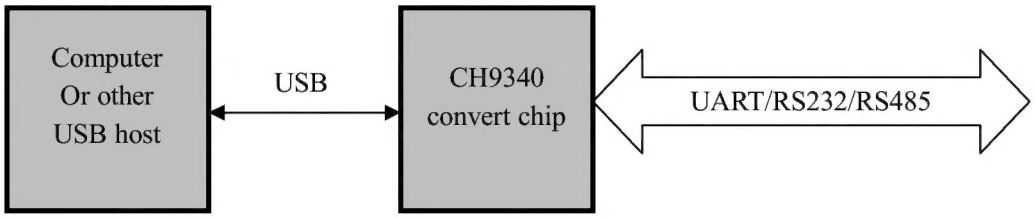


## 2. Features

- Full-speed USB device interface, compatible with USB V2.0.
- Based on USB CDC, used to upgrade the original serial peripheral devices, or expand additional serial UART through USB.
- Free-driver, serial applications are totally compatible under the Windows OS, without any modification.
- Hardware full-duplex serial UART, built-in transmit-receive buffer, supports communication baud rate varies from 50bps to 1Mbps.
- Supports common MODEM signals RTS, DTR, DCD, RI, DSR and CTS.
- Supports RS232, RS485, RS422 and other interfaces, through external level conversion chip.
- Built-in clock, not need external crystal oscillator.
- Supports 5V and 3.3V supply voltage.
- Pins in the SOP16 package are basically compatible with the CH340.
- Provides ESSOP-10 and SOP-16 lead-free package, compatible with RoHS.

## 3. Package

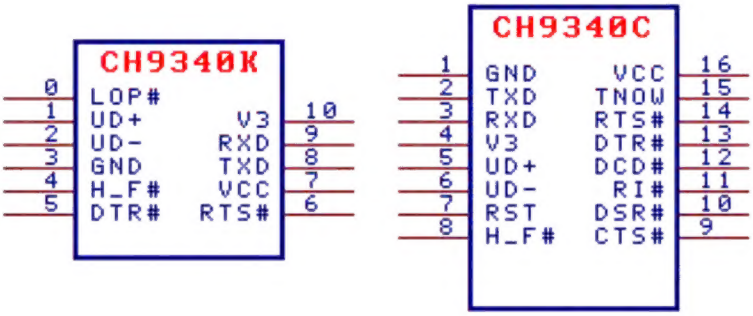

| Package | Width Of Plastic | | Pitch Of Pin | | Instruction Of Package | Ordering Information |
|---|---|---|---|---|---|---|
| ESSOP-10 | 3.9mm | 150mil | 1.00mm | 39mil | Shrink small outline 10-pin patch with backplane | CH9340K |
| SOP-16 | 3.9mm | 150mil | 1.27mm | 50mil | Small outline 16-pin patch | CH9340C |

Note: The backplane of CH9340K is 0# pin, which is suspended or no connection.

## 4. Pin Out

| ESSOP10 Pin No. | SOP16 Pin No. | Pin Name | Pin Type | Pin Description |
|---|---|---|---|---|
| 7 | 16 | VCC | Power | Power supply voltage input, requires an external 0.1uF power decoupling capacitor. |
| 3 | 1 | GND | Power | Ground |
| 10 | 4 | V3 | Power | Connect to VCC to input external power supply when 3.3V supply voltage, connect to external 0.1uF decoupling capacitor when 5V supply voltage |
| 1 | 5 | UD+ | USB signal | Connect to USB D+ Signal directly |
| 2 | 6 | UD- | USB signal | Connect to USB D- Signal directly |
| 8 | 2 | TXD | Output | Serial data output |
| 9 | 3 | RXD | Input | Serial data input, built-in pull-up resistor |
| None | 9 | CTS# | Input | MODEM input signal, clear to send, active low, built-in pull-up |
| None | 10 | DSR# | Input | MODEM input signal, data set ready, active low, built-in pull-up |
| None | 11 | RI# | Input | MODEM input signal, ring indicator, active low, built-in pull-up |
| None | 12 | DCD# | Input | MODEM input signal, data carrier detect, active low, built-in pull-up |
| 5 | 13 | DTR# | Output | MODEM output signal, data terminal ready, active low |
| 6 | 14 | RTS# | Output | MODEM output signal; request to send, active low |
| None | 15 | TNOW | Output | Serial UART sends ongoing status indication, active high |
| None | 7 | RST | Input | External reset input, active high, built-in pull-down resistor |
| 4 | 8 | H_F# | Input | Configuration select input pin, built-in pull-up resistor. There are three options: If H_F# pin is suspended or connected to high level, select the default operation mode; If H_F# pin is connected to low level (GND), select the dedicated baud rate mode; H_F# pin is short-circuit to LOP# pin to enable 3.3V lower- power sleep mode, this mode is only used in the VCC=V3 and less than 3.6V applications |
| 0 | None | LOP# | Input | 3.3V lower- power sleep configuration pin, used to cooperate with H_F# pin |

## 5. Functional Specification

CH9340 has a built-in USB pull-up resistor, and the UD+ and UD- pins shall be directly connected to the USB bus.

CH9340 has a built-in power-on reset circuit. CH9340C also provides external reset input pin which is active at high level.

CH9340 has a built-in clock generator, without external crystal and oscillation capacitor.

CH9340 supports 5V and 3.3V supply voltage. When using 5V supply voltage, the VCC pin of CH9340 will input an external 5V power supply, and the V3 pin shall be connected to an external power decoupling capacitor with a capacity of about 0.1uF. When using 3.3V supply voltage, the V3 pin of the CH9340 shall be connected to the VCC pin, and input an external 3.3V power supply at the same time, and the operating voltage of other circuits connected to the CH9340 cannot exceed 3.3V.

CH9340 automatically supports the USB device suspension to save the power consumption.

For 3.3V applications where V3 is short-circuit to VCC, the low-power mode of USB device suspension is supported in the default operating status. In addition, when H_F# pin is short-circuit to LOP# pin (only check once after power-on reset), CH9340K also supports 3.3V lower-power sleep mode.

DTR# pin of CH9340 is used as a configuration input pin before USB configuration is completed. It can be connected to an external 4.7KΩ pull-down resistor to generate a default low level during USB enumeration, so as to request a larger supply current from the USB bus through configuring descriptor.

The pins of CH9340 in UART mode include: data transfer pin, MODEM interface signal pin and assistant pin.

Data transfer pins include: TXD and RXD. When serial UART input is idle, RXD is high level. When serial UART output is idle, TXD is high level.

MODEM interface signal pins include: CTS#, DSR#, RI#, DCD#, DTR# and RTS#. All these MODEM interface signals are controlled and function defined by the computer application.

Assistant pins include: TNOW. TNOW pin with a high level which indicates that CH9340 is sending data from serial UART, and changes to low level after sending. In RS485 and other half-duplex serial UART modes, TNOW can be used to indicate the serial UART's transmit-receive switch status.

CH9340 has built-in independent transmit-receive buffer, and supports simplex, half-duplex or full duplex asynchronous serial communication. Serial data includes 1 low-level start bit, 5, 6, 7 or 8 data bits, 1 or 2 high-level stop bits, and supports odd/even/mark/space parity. CH9340 supports common communication baud rates: 50, 75, 100, 110, 134.5, 150, 300, 600, 900, 1200, 1800, 2400, 3600, 4800, 9600, 14400, 19200, 28800, 33600, 38400, 56000, 57600, 76800, 115200, 128000, 153600, 230400, 460800, 921600, etc.

The allowable baud rate error of CH9340's serial UART receiving signal is less than 2%, and the baud rate error of the serial UART transmitting signal is less than 1%.

Under Windows, Linux and other OS, CH9340 supports free-driver, and the mostly original serial applications are totally compatible, without any modification.

CH9340 can be used to upgrade the original serial peripheral device, or expand additional serial ports for computer via USB bus. RS232, RS485, RS422 and other interfaces can be further provided through external level conversion chip.

# 6. Parameters

## 6.1. Absolute Maximum Ratings

(Critical state or exceeding maximum can cause chip to not work or even be damaged)

| Name | Parameter Description | Min | Max | Unit |
|---|---|---|---|---|
| TA | Operating ambient temperature | -20 | 85 | ℃ |
| TS | Storage ambient temperature | -55 | 125 | ℃ |
| VCC | Supply voltage (VCC connects to power, GND to ground) | -0.5 | 6.0 | V |

| | | | | |
|---|---|---|---|---|
| VIO | Voltage of the input or output pins | -0.5 | VCC+0.5 | V |

## 6.2. Electrical Parameters

(Test Conditions: TA=25℃, VCC=5V, Exclude Pins connected to USB Bus)
(If the supply voltage is 3.3V, all current parameters in the table need to multiply the coefficient of 40%)

| Name | Parameter Description | | Min | Typ. | Max | Unit |
|---|---|---|---|---|---|---|
| VCC | Power supply voltage | V3 doesn't connect to VCC | 4.0 | 5 | 5.3 | V |
| | | V3 connects to VCC, VCC=V3 | 3.0 | 3.3 | 3.6 | |
| ICC | Operating supply current | VCC=5V | | 7 | 15 | mA |
| | | VCC=V3=3.3V | | 5 | 10 | mA |
| ISLP | Supply current (USB suspend) | VCC=5V | | 0.07 | 0.2 | mA |
| | | VCC=V3=3.3V | | 0.06 | 0.15 | mA |
| | | VCC=V3=3.3V and 3.3V lower-power sleep mode | | 0.008 | 0.016 | mA |
| VIL | Input low voltage | | -0.5 | | 0.8 | V |
| VIH | Input high voltage | | 2.0 | | VCC+0.5 | V |
| VOL | Output low voltage (6mA draw current) | | | | 0.5 | V |
| VOH | Output high voltage (4mA output current) (Only 50uA output current during chip reset) | | VCC-0.5 | | | V |
| IUP | Input current of the input with built-in pull-up resistor | | 35 | 70 | 110 | uA |
| IDN | Input current of the input with built-in pull-down resistor | | -40 | -80 | -120 | uA |
| VR | Voltage threshold of power-on reset | | 2.2 | 2.4 | 2.7 | V |

## 6.3. Timing Parameters

(Test Conditions: TA=25℃, VCC=5V)

| Name | Parameter Description | Min | Typ. | Max | Unit |
|---|---|---|---|---|---|
| TPOR | Reset time of power-on | 8 | 15 | 23 | mS |
| TRST | Reset delay after external reset input | 10 | 14 | 20 | mS |
| TWAK | Wake-up completion time after chip sleep | 1 | 1.6 | 3 | uS |

# 7. Application

## 7.1. USB to TTL Serial Port

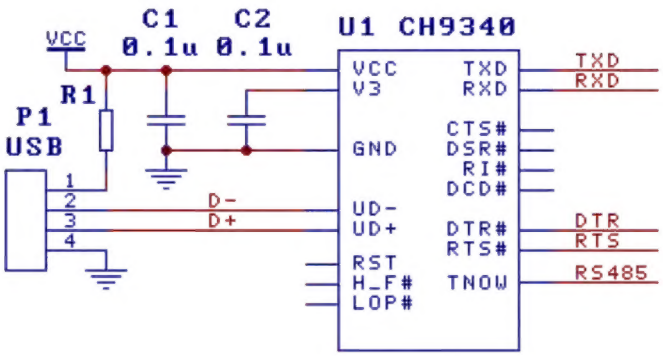

The figure above shows that USB converts to TTL serial port realized by CH9340. CH9340 provides common serial UART signals and MODEM signals. In addition, it can convert TTL serial port to RS232 serial port by adding level conversion circuit.

In general, the signal lines in the figure can only be connected to RXD, TXD and the pubilc ground line. Other signal lines can be selected as needed, and can be suspended when not needed.

If H_F# pin is connected to GND, then select the dedicated baud rate mode to better support MCU such as ATMEL. Please contact the technical person for details.

P1 is a USB port. The USB bus includes a pair of 5V power lines and a pair of data signal lines. Generally, the +5V power line is red, the ground line is black, the D+ signal line is green, and the D- signal line is white. The maximum supply current provided by the USB bus can reach 500mA. In general, CH9340 and low-power USB products can directly use the 5V power supplied by USB bus. If the USB products use standing power supply provided by other supply methods, CH9340 can also use the standing power supply to avoid I/O current backflow with the USB power supply.

The capacity of capacitor C2 of V3 pin is 0.1μF, which is used for internal 3.3V power node decoupling of CH9340, and the capacity of C1 is 0.1μF, which is used for external power decoupling.

When designing the PCB, pay attention to: decoupling capacitor C2 and C1 get as close to connected pins of CH9340; making sure D+ and D- signal lines are close to the parallel wiring and providing ground or copper on both sides to reduce signal interference from the outside.